Fermi National Accelerator Laboratory
Technical Division
Development and Test Department
Mail stop 316
P.O. Box 500
Batavia, Illinois • 60510

TD-04-022
6/1/2004

DESIGN OF A SAMPLE HOLDER FOR Nb_3Sn CABLE TEST AT FRESCA

G. Ambrosio[1], S. Bartlett[2], D. Dietderich[2], L. Elementi[1], K. Ewald[1], A. Nicolai[1], A. Simmons[1], A. Verweij[3], O. Vincent-Viry[3]

[1]Fermi National Accelerator Laboratory, Batavia IL 60510, USA
[2]Lawrence Berkeley National Laboratory, Berkeley CA 94720, USA
[3]CERN, CH-1211 Genève 23, Switzerland

Abstract:

This report presents the design of a sample holder for measurement of the critical current of Nb_3Sn cables at FRESCA (CERN cable test facility). This design is based on the sample holder presently used at FRESCA for NbTi cables and fits its external part ("collars"). The Nb_3Sn cables will be heat-treated using a reaction holder and an appositely designed retort. They will be impregnated inside the sample holder used for test. The pre-stress will be generated by addition of a Kapton layer to the cable stack after impregnation. Two "dummy" cables, surrounding the cables under test ("active"), provide a magnet-like environment and protect the active cables during assembly and pre-stress application. Three splices inside the sample holder connect the two active cables to each other and to the NbTi leads. The splices are cooled by liquid helium locally in contact with them. In a regular test the splices are located outside of the region exposed to the magnetic field. In a special test, where the active cables are completely within the field region, the splices are set at the boundaries of the field region.

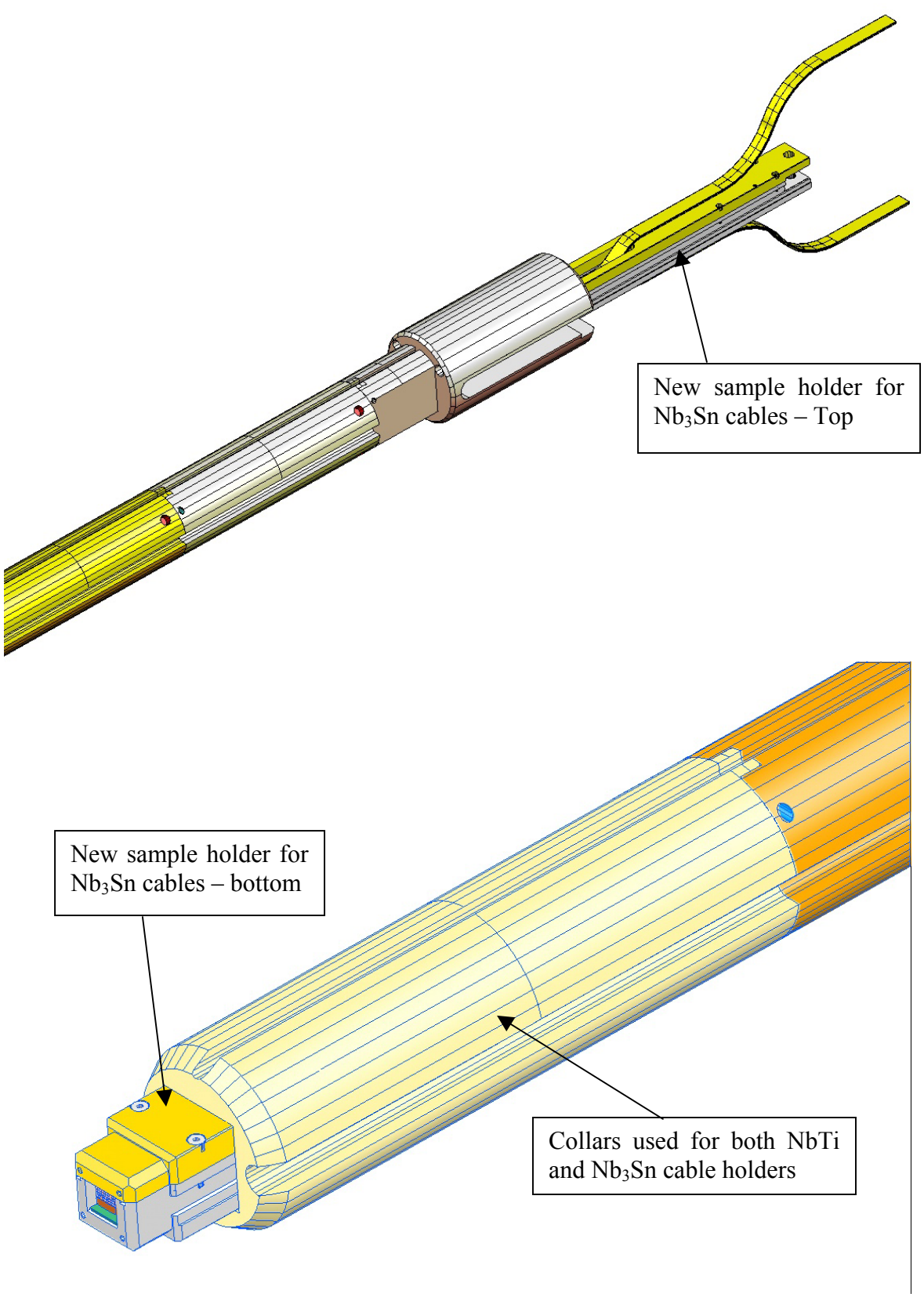

Figure 1:Solid model of the sample holder for Nb_3Sn cable test at FRESCA

1. INTRODUCTION

Fermilab is developing new generation superconducting magnets for present and future accelerators [1], including large-aperture high-gradient quadrupoles as part of the LARP (LHC Accelerator Research Program) [2] in collaboration with LBNL and BNL. These magnets utilize multi-strand Rutherford-type cables of different designs made of high critical current Nb_3Sn strands. Testing of cable short samples is an important part of the magnet R&D program. In recent years tests of Nb_3Sn cables for accelerator magnets were performed at NHMFL and BNL [3-7]

In 2004 collaboration between Fermilab, CERN and LBNL was started, aiming at testing Nb_3Sn cable samples at FRESCA using a new sample holder appositely designed (Figure 1). These tests will contribute to the Nb_3Sn magnets R&D and will prove the capability of FRESCA in testing high-Jc Nb_3Sn cables made of state-of-the-art strands.

2. FRESCA TEST FACILITY

FRESCA [8] is the cable test facility in operation at CERN. The field is provided by a NbTi dipole capable of 10 T at 1.9 K. The field is uniform along 600 mm. A detailed field profile is shown in Figure 2. The power leads can carry 32 kA and a superconducting transformer has been successfully tested up to 40 kA [9]. Tests of NbTi cables are routinely performed at 4.2 and 1.9 K using the cable sample holder shown in Figure 3.

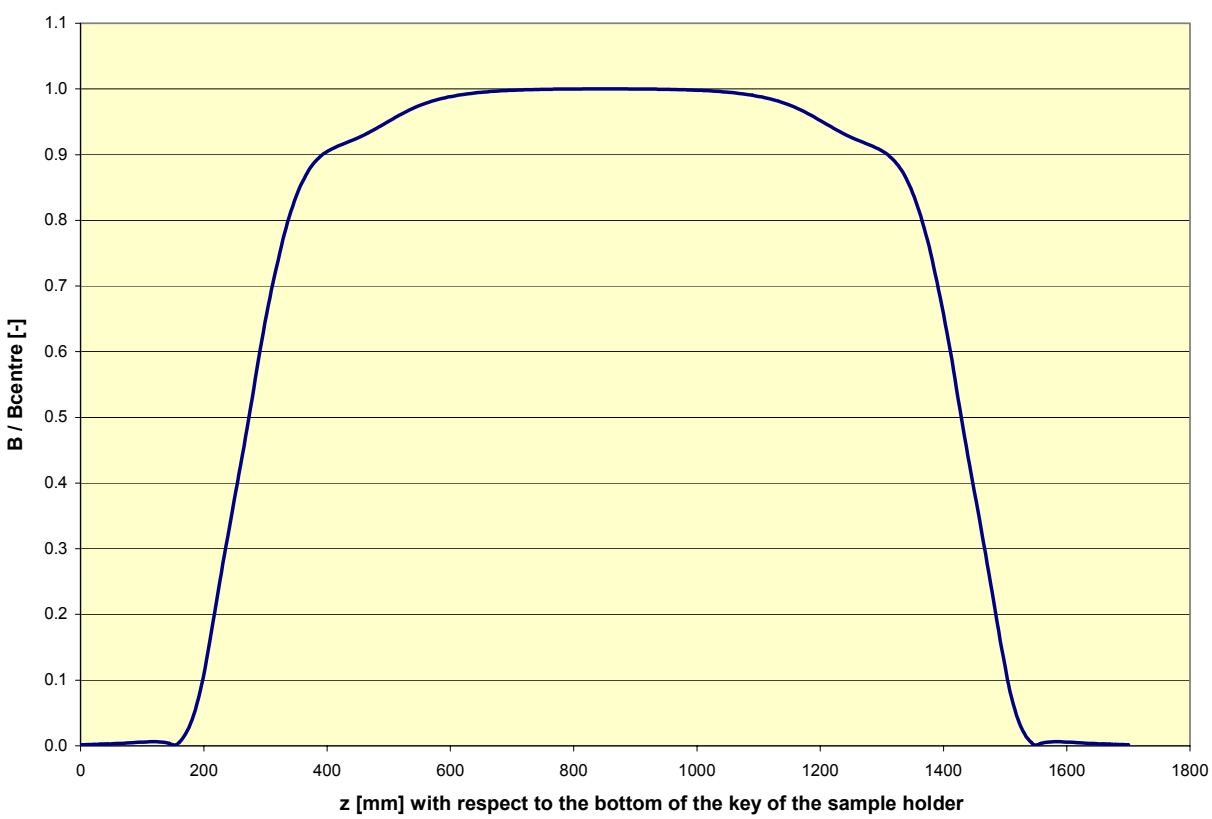

Figure 2: Field profile in FRESCA

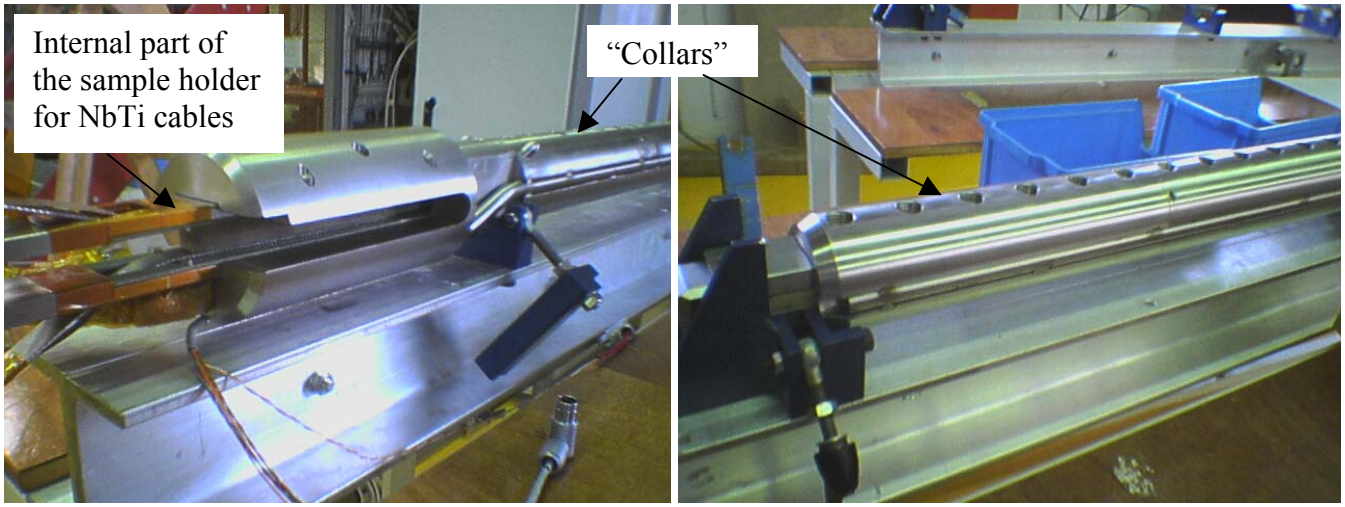

Figure 3: Photos of the sample holder for NbTi cables used at FRESCA

3. SAMPLE HOLDER DESIGN

In order to test Nb_3Sn cables at FRESCA a new sample holder was needed. It was decided to fabricate one that could fit the external part of the existing NbTi holder "collars" (see Fig. 3). There are several advantages coming from this choice. The external part of the holder have to fit into the magnet bore and should have channels for liquid helium, pins for the centering and bolts to apply the pre-stress on the samples. By using the external part of the existing NbTi holder all these features come for free and both cost and fabrication time are reduced.

A solid model of the Nb_3Sn cable sample holder is shown in Figure 1. The inner part of the holder is the new one. It consists of a stainless steel case (a U-shaped base and a top cover) surrounding four cables. Two active samples are in the center of the cable stack. Two dummy cables provide a magnet like environment and protect the active cables during assembly and pre-stress application. This concept was successfully used in the sample holder for Nb_3Sn cables designed by P. Bauer et al. at FNAL for tests at NHMFL and BNL [3].

Three splices will be located inside the sample holder: a splice between the two active Nb_3Sn cables in the bottom part of the holder (return splice), two splices between the active cables and the NbTi leads in the top part of the holder (lead splices). In order to have stabilization and cooling of the return splice two copper strips will be part of the splice block (Figure 8). Holes in the sample holder will allow heat exchange between the lead splices (see drawings in the appendix) and liquid helium. The Nb_3Sn samples will be 1730 mm long in order to have all splices outside of the field region (Figure 2).

The impregnation of the samples will be performed in the final holder. Also this concept was successfully adopted in the sample holder used at NHMFL and BNL [3]. This choice avoids the need of a mold for the impregnation and of very tight tolerance on the bottom inner surface of the sample holder. The impregnation procedure will be the same as for FNAL Nb_3Sn magnets. It will be performed in a vacuum oven, with the sample standing at ~30 degrees from the bottom. The epoxy (CTD 101) will be injected from the bottom end of the sample (Figure 7). O-ring seals all along the sample holder (Figure 4) will force the epoxy, pushed by gravity, to fill it impregnating the sample. The epoxy flow will be stopped when it reaches the splices to the NbTi leads.

Pre-stress will be applied by means of interference between the cable stack and the top plate of the holder. This interference will be created by inserting a Kapton film (50 μm thick) on the top of the cable stack after impregnation. The bolts on the collars will be used to push the top plate in contact with the base, closing the gap created by the interference. In case of excessive load applied to the bolts the extra-load will be transferred to the sides of the U-shaped base, that is stiffer than the cable stack, reducing the risk of excessive pre-stress on the cables.

Shoulder-bolts at the top and bottom of the sample holder will keep the top plate aligned with the base during shipment and installation (see Figure 7). Temporary clamps will be used for shipment and during the insertion of the inner part of the sample holder into the collars.

A Finite Element analysis was performed in order to compute the stress distribution in the Nb_3Sn cables after pre-stress application, after cooldown and at maximum forces (32 kA and 10 T).

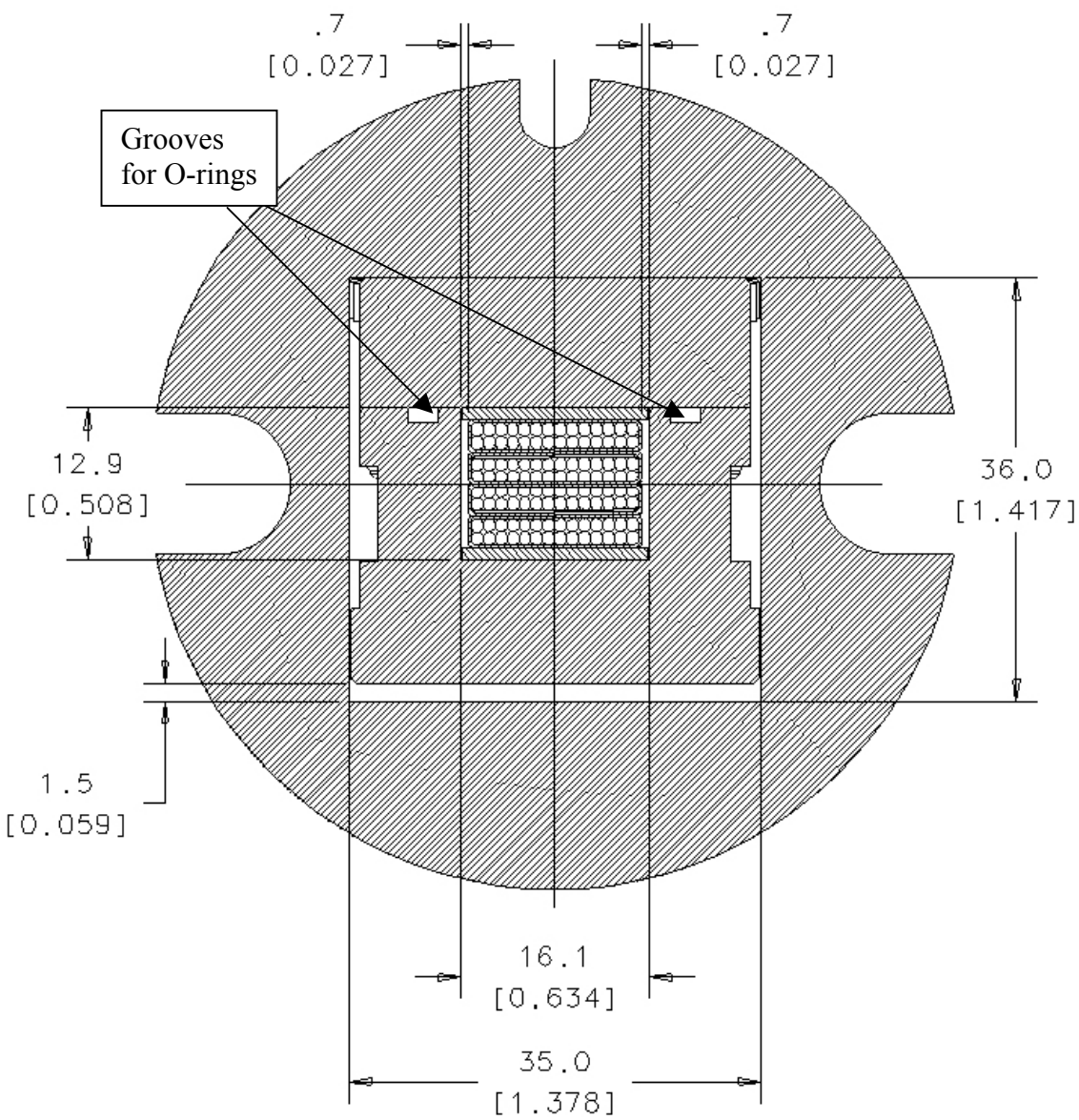

Figure 4: Cross section of the sample holder. Dimension in mm [inches].

The goal of this study was to check the design and optimize the pre-stress. The magnetic forces have been computed for three sample orientations: background field transverse, parallel or anti-parallel to the cable self-field. The transverse orientation was rejected because the torque generated at maximum field and current could damage the test facility. The analysis showed that the sample holder (new inner part for Nb_3Sn cables and old collars) can provide sufficient pre-stress and support when the background field is parallel or anti-parallel to the self-field. The FE models and the results are presented and discussed in [10] for an earlier version of the sample holder based on the same concept.

A groove (Figure 4) is machined along both sides of the sample holder. It offers a channel for the helium, necessary for the cooling of the splices inside the holder, and it will also accommodate the wires for voltage taps.

The NbTi leads will be made out of cables used for the inner layer of the LHC dipoles. They will be connected to the test facility by pressure contacts (i.e. without splice). In order to have a low resistance (1-4 nΩ), the NbTi leads should be pre-solder into the shape best fitting the pressure-contact fixture. CERN will take care of pre-soldering the leads before shipping them to Fermilab.

The sample holder has been designed to allow testing of Nb_3Sn cables (1090 mm long) completely set in the field region. This sample set up has been designed for testing cables that may be unstable at low magnetic fields [11]. In this case the splices will be set at the boundaries of the field region and will be cooled by helium locally in contact with the splices.

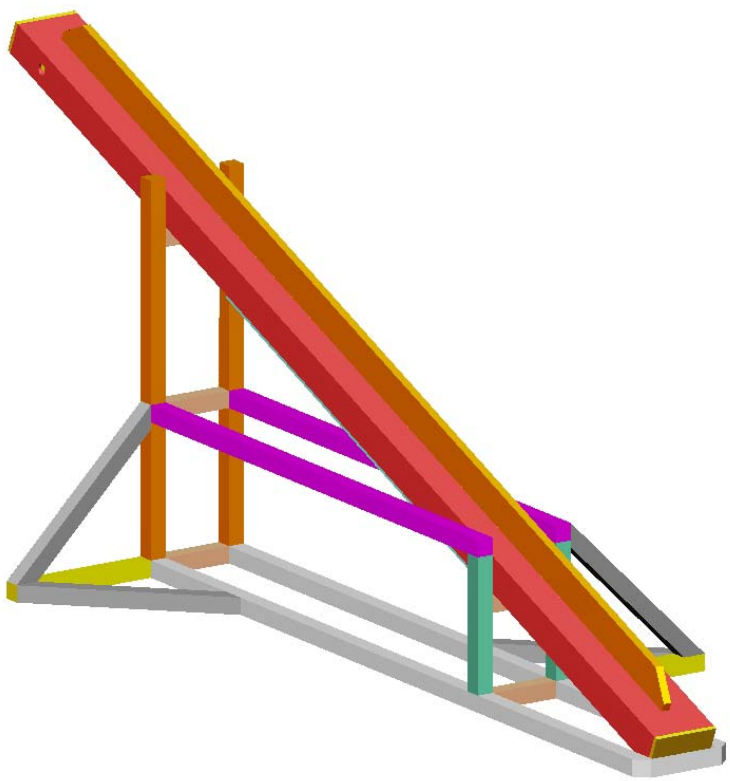

Figure 5: New reaction retort design to fit the IB3 oven

4. SAMPLE PREPARATION

The Nb_3Sn cable samples can be insulated before heat treatment (using ceramic or S2-glass tape) or after it (in this case also an E-glass sleeve may be used). The heat treatment will be performed into the oven (L&L Special Furnace) used for Nb_3Sn cable and coil heat treatment in IB3. A new reaction retort (Figure 5) has been fabricated in order to accommodate samples as long as 1740 mm. The samples will be placed into a reaction holder in order to keep them straight during the heat treatment. Witness samples of strand will be set at both ends of the retort and in its center. The temperature uniformity in the oven, (+/- 4 C°) at the set points of a typical Nb_3Sn reaction cycle, is presented in [12].

5. REFERENCES

1) S. Feher et al., *"Test Results of Shell-type Nb_3Sn Dipole Coils"* to be published in the proceeding of MT-18, Morioka (Japan).
2) A.V. Zlobin et al., *"Conceptual Design Study of Nb_3Sn Low-beta Quadrupoles for 2nd Generation LHC IRs" ",* IEEE Transactions on Applied Superconductivity, vol. 13, no. 2, pp. 1266-1269 (2003).
3) P. Bauer, K. Ewald, J. Ozelis *"Design of a Sample Holder for Measurement of Nb_3Sn Cable Critical Current Under Transverse Loading Conditions"*, Fermilab Technical Division note TD-99-051*.
4) P. Bauer et al., *"Fabrication and Testing of Rutherford-type Cables for React and Wind Accelerator Magnets",* IEEE Transactions on Applied Superconductivity, vol. 11, no. 1, pp. 2457-2460 (2001).
5) P. Bauer, et al., *"Results of the Third Series of Measurements of the Critical Currents of Nb_3Sn Cables for the React & Wind Cable Development Program"*, Fermilab Technical Division note TD-01-069*.
6) G. Ambrosio, N. Andreev, A. Ghosh *"Test of cables made of 1-mm OST-MJR strand at BNL"* Fermilab Technicalal Division note TD-04-008*.
7) D. Dietderich et al. *"Critical Current of Superconducting Rutherford Cable in High Magnetic Fields with Transverse Pressure"* IEEE Trans. on Applied Superconductivity, Vol. 9, no. 2, p. 122 (1999).
8) A.P. Verweij, J. Genest, A. Knezovic, D.F. Leroy, J.-P. Marzolf, L.R. Oberli *"1.9 K Test Facility for the Reception of the Superconducting Cables for the LHC"* IEEE Transactions on Applied Superconductivity, vol. 9, no. 2, pp. 153-156 (1999)
9) A.P. Verweij, private communication.
10) G. Ambrosio *"2D Magnetic and Mechanical Analysis of the Sample Holder for Nb_3Sn Cable Test at FRESCA (CERN)"*, Fermilab Technical Division note TD-04-002*.
11) See presentations at "*Workshop on Instabilities in Nb_3Sn Strands, Cables, and Magnets"* Fermilab April 28-30, 2004**.
12) E. elementi, G. Ambrosio, D. Connolly "Test of Temperature Uniformity in the Nb_3Sn Reaction Oven" Fermilab Technical Division note TD-04-010*.

* Available on line at: http://www-td.fnal.gov/info/td_library.html
** Presentations available on line at: http://tdserver1.fnal.gov/NB3SN/Workshop/Agenda.html

APPENDIX A - design

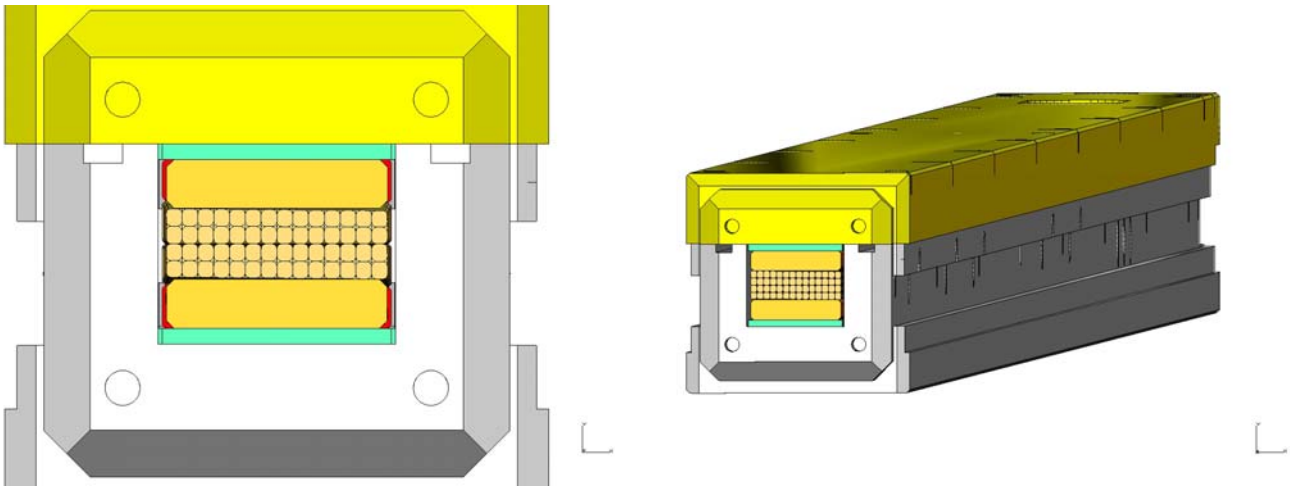

Figure 6 Left: end view of the Nb_3Sn sample holder. Right: All Nb_3Sn sample holder

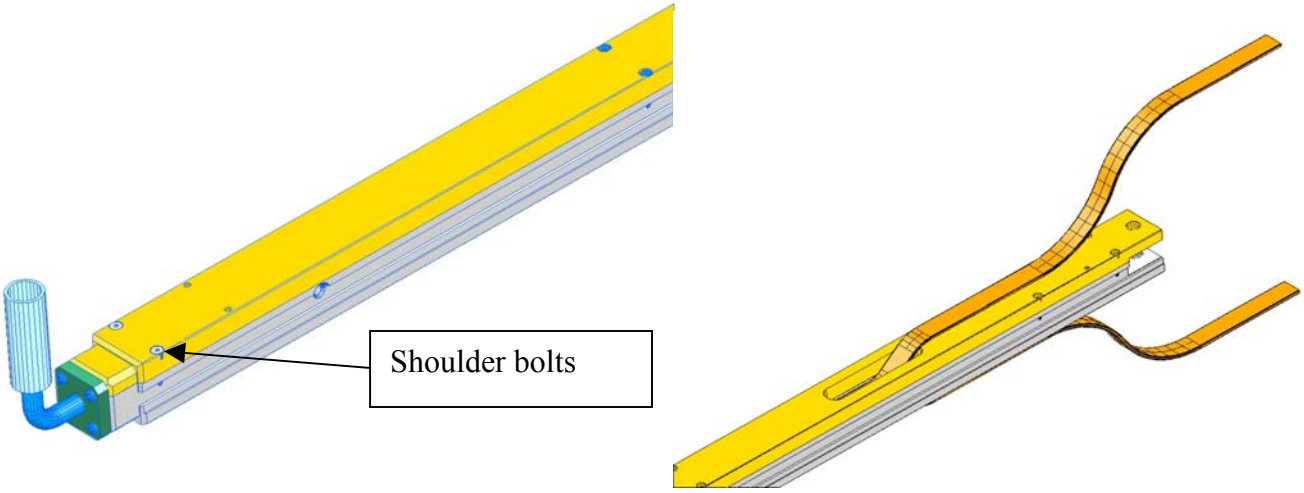

Figure 7 Left: Return end of the sample holder with pipe for epoxy impregnation. Right: Lead end with NbTi leads

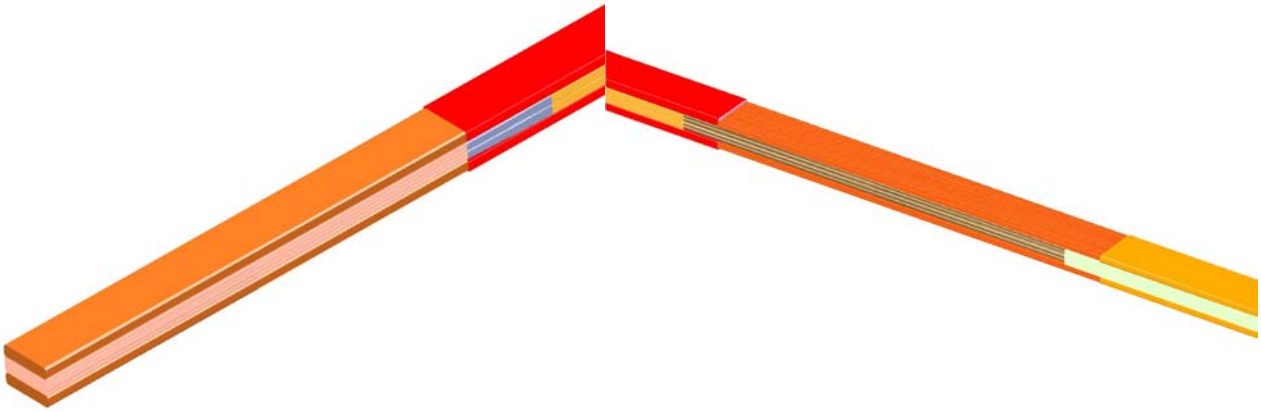

Figure 8 Left: return splice with copper shims. Right: lead splices

REV.	DESCRIPTION	DRAWN	DATE
		APPD.	DATE
--	NEW E.R #7694	SIMMONS	3-31-04

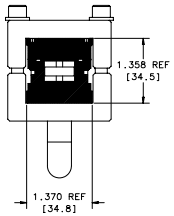

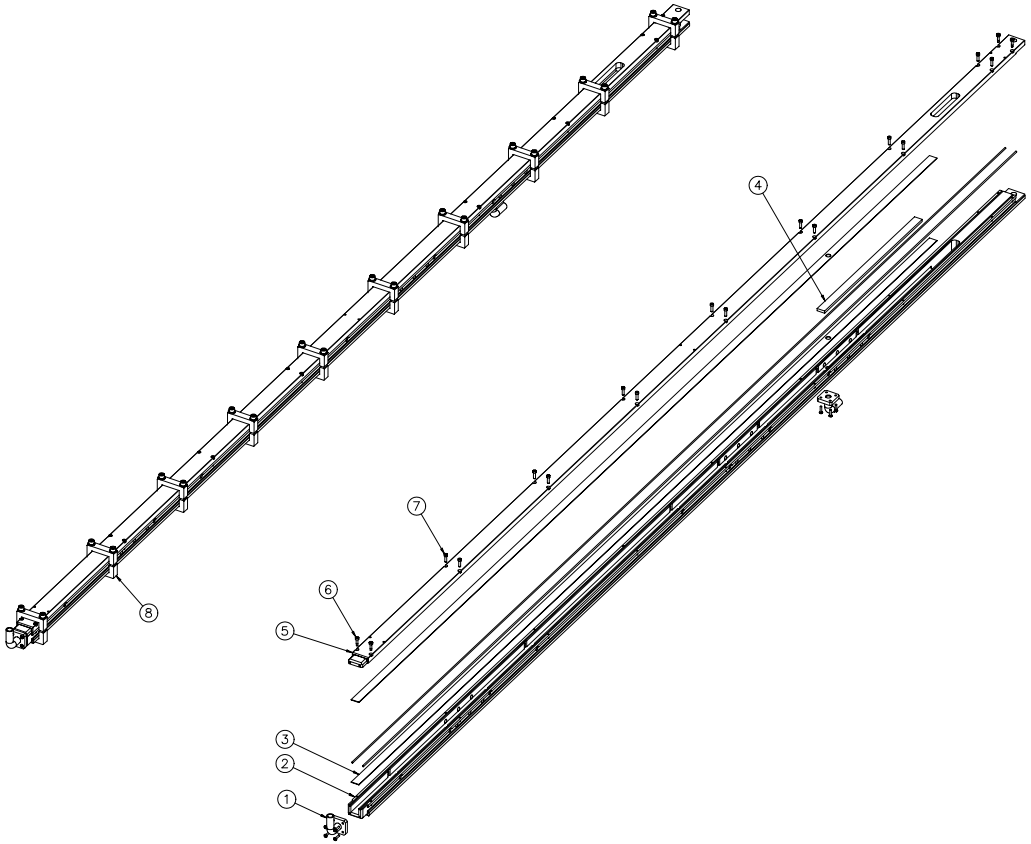

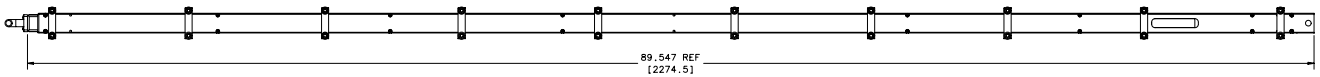

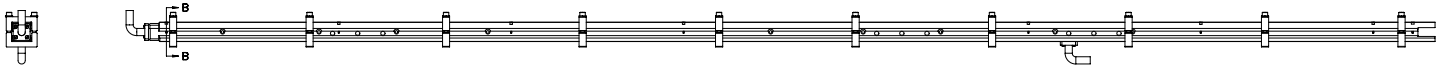

ITEM	PART NO.	DESCRIPTION OR SIZE	QTY.
8	5525-MB-411694	CERN SHIPPING CLAMP ASSEMBLY	10
7	McMASTER CARR # 94035A527	#6-32 UNC SKT.HD. X .68 LG. ST.STL	14
6	McMASTER CARR # 94035A519	4-40 UNC SKT.HD. SHOULDER BOLT ø.125 SHOULDER X .375 LG. ST.STL.	4
5	5525-ME-411682	CABLE HOLDER - TOP	1
4	5525-MB-411697	CABLE SEPARATOR	1
3	5525-MC-411681	CABLE SHIM	2
2	5525-ME-411680	CABLE HOLDER - BASE	1
1	5525-MB-411676	EPOXY FILLER ASSEMBLY	2

PARTS LIST

UNLESS OTHERWISE SPECIFIED			ORIGINATOR	G. AMBROSIO	
.XX	.XXX	ANGLES	DRAWN	L. SIMMONS	3-31-04
±	±	±	CHECKED	N. ANDREEV	4-06-04
1. BREAK ALL SHARP EDGES .02 MAX.			APPROVED	G. AMBROSIO	4-06-04
2. DO NOT SCALE DRAWING.			USED ON		
3. DIMENSIONS BASED UPON ANSI Y14.5M-1994					
4. MAX. ALL MACH. SURFACES ✓			MATERIAL		

FERMI NATIONAL ACCELERATOR LABORATORY
UNITED STATES DEPARTMENT OF ENERGY

HIGH FIELD MAGNET
CERN CABLE SAMPLE HOLDER
SAMPLE HOLDER ASSEMBLY

SCALE	FILMED	DRAWING NUMBER	REV.
1:3		5525-ME-411675	A

CREATED WITH I-DEAS 9m3 | USER NAME:SIMMONSA

INCHES 0 1 2 3 4 5 6
METRIC 0 10 20 30 40 50 60 70 80 90 100 110 120 130 140 150